NOTICE OF PUBLIC HEARING

VARIANCE APPLICATION

R.M. of St. Clements

Under authority of *The Planning Act*, the municipal Council will hold a public hearing at the time and location listed below to hear from those who wish to speak in support or objection, or to ask questions. For more info on how to register for the public hearing please contact the municipality at 204-482-3300.

Tuesday	**Council Chambers**
March 24th, 2026	**1043 Kittson Road,**
6:00 PM	**RM of St. Clements, MB**

Note: property owners are responsible for notifying "tenants"

APPLICATION INFORMATION

Application File: **VO 2, 2026**

Applicant: Sylvia Urciuol & Eugene Heinrichs

Property Location: Henderson Hwy, Ludwick and Rebeck Roads, St. Clements
Roll #: 15021,15400,15700,15900,16100, 16300,16400,16500
Legal: CT2198353/1, CT2023590/1, CT3130900/1, CT2760492/1, CT1960823/1, CT3073961/1, CT3178383/1, CT3300607/1, respectively

Application Purpose:
The applicant proposes to reduce the minimum site area of the seven-teen (17) Proposed Lots and one (1) Residual as part of the conditions for subdivision application S26-3130 in the "AR" Agriculture Restricted zone.

Variance Request in "AR" Agriculture Restricted zone	Zoning By-law Requirement	Proposed by Applicant
Site Area for (Table 11, Section 5.4)	4 acres (min.) in site area and 198 ft in the width	**Proposed Lots 1- 17**: 2.01-2.57 ac, 99.6 ft- 357.7 ft **Residual under** CT 2198353/1 (East and West) – 3.52 ac, 248-485 ft

A copy of the above-noted proposal and supporting material is available on the Red River Planning District website at https://www.redriverplanning.com/hearings.php or by contacting the Red River Planning District in person during normal business hours Monday to Friday at 2978 Birds Hill Road, East St. Paul, by phone at 204 669-8880, or by email at info@rrpd.ca

RED RIVER PLANNING DISTRICT

2978 Birds Hill Rd
East St. Paul, Manitoba R2E 1J5
Toll Free: 1-800-876-5831
Phone: 204-669-8880
Fax: 204-669-8882

VARIANCE APPLICATION REPORT

Date	February 20, 2026
Application File	**VO 2, 2026**
Applicant	Sylvia Urciuol & Eugene Heinrichs

SUBJECT PROPERTY INFORMATION

Property Location - Street Address - Roll # - Legal	Henderson Hwy, Ludwick and Rebeck Roads, St. Clements 15021,15400,15700,15900,16100, 16300,16400,16500 CT2198353/1, CT2023590/1, CT3130900/1, CT2760492/1, CT1960823/1, CT3073961/1, CT3178383/1, CT3300607/1, respectively
Zoning	"AR" **Agriculture Restricted zone** RM of St. Andrews Zoning By-law No. 4066
Development Plan Designation	"AR" Agriculture Restricted designation RRPD Development Plan By-law No. 272/19
Property Size	± 91 ac acres in total area (+/-) N/A feet in width (+/-) *NOTE: Information is based on GIS data*

APPLICATION DETAILS / PROPOSAL

Variance Request in "AR" Agriculture Restricted zone	Zoning By-law Requirement	Proposed by Applicant
Site Area for (Table 11, Section 5.4)	4 acres (min.) in site area and 198 ft in the width	**Proposed Lots 1- 17**: 2.01-2.57 ac, 99.6 ft- 357.7 ft **Residual under** CT 2198353/1 (East and West) – 3.52 ac, 248-485 ft

Application Purpose
The applicant proposes to reduce the minimum site area of the seven-teen (17) Proposed Lots and one (1) Residual as part of the conditions for subdivision application S26-3130 in the "AR" Agriculture Restricted zone.

There are Residual lots remaining with smaller that required width measurements, however no variance needed for unaltered width according to the sec. 3.31.1.3 of the ZBL of St. Clements.

The municipality has no concerns with this application as it is a condition of subdivision application S26-3110, MTI Highway has no concerns either.

OPTIONS FOR COUNCIL'S CONSIDERATION

Under section 97(1) of *the Planning Act*, on completion of the public hearing, Council may:

(a) reject the requested variance; or

(b) varying the application of specific provisions of the zoning by-law with regard to the affected property in the manner specified in the order if the variance
  (i) will be compatible with the general nature of the surrounding area,
  (ii) will not be detrimental to the health or general welfare of people living or working in the surrounding area, or negatively affect other properties or potential development in the surrounding area,
  (iii) is the minimum modification of a zoning by-law required to relieve the injurious affect of the zoning by-law on the applicant's property, and
  (iv) is generally consistent with the applicable provisions of the development plan by-law, the zoning by-law and any secondary plan by-law.

RECOMMENDED CONDITIONS OF APPROVAL

Should Council approve the requested zoning variances, the following conditions are recommended:

1. This variance is limited to what has been presented in this application. Any further changes, replacement or additions that are not in substantial conformance with the application would require a new approval;

1. Applicant / owner obtains all required permits from the Red River Planning District and the municipality, if required.

RRPD LOCATION MAP

SUPPORTIVE MAPPING

Highway Control Zones
Rail
Subject Property
Roads
Parcel Outline
Water Bodies

Variance Order VO 2, 2026
4994/5012/5016/5024 Rebeck+340 Ludwick+5545 Henderson, RM of St. Clements

Designation: "AR" Agricultural Restricted, "GD" General Development
Zoning: "RR" Rural Residential, "AR" Agricultural Restricted

Terms of Use/Disclaimer: All information is for display and estimate purposes only and is provided "as-is", the accuracy of information contained cannot be guaranteed and is in no way a legal representation of the municipality.

RED RIVER PLANNING DISTRICT

ADDITIONAL INFORMATION – SUBDIVISION APPLICATION MAP

SUBDIVISION APPLICATION MAP
LUDWICK ROAD
RM OF ST. CLEMENTS
OF PART OF
RL 230-234 PARISH OF ST. ANDREWS

METRIC

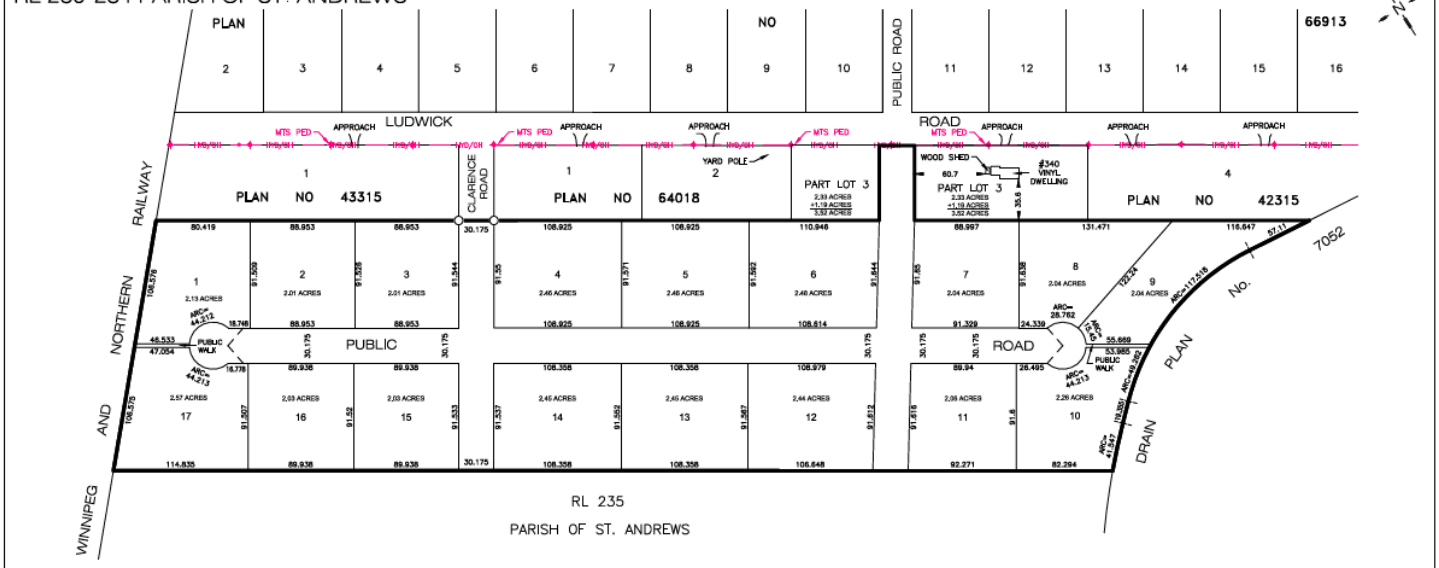

Note:
This map has been prepared for subdivision application purposes only.

This is not a final survey.

HYDRO CABLES (OVERHEAD) _ _ _ _ _ _ — HYD/OH —
POWER POLE _ _ _ _ _ _ _ _ _ _ _ _ _ ◆
GUY WIRE ANCHOR _ _ _ _ _ _ _ _ _ _ _ •
TOTAL AREA OF LAND DEDICATED TO THE PUBLIC = 9.05 ACRES
THE LAND AFFECTED BY THIS PROPOSAL IS SHOWN HEREON BORDERED THUS _ _ _ _ _ ———
THE TOTAL AREA OF LAND AFFECTED BY THIS PROPOSAL = 47.04 ACRES
IRON POSTS FOUND AND CONFIRMED ARE DESCRIBED AND SHOWN THUS _ _ _ _ _ ○

This survey was made between the 28th day of June, 2022, and the 26th day of July, 2024.
Prepared by: Scott J. Dunphyroh, M.L.S.
6th day of February, 2026

BARNES & DUNCAN
SURVEYING, ENGINEERING & PLANNING
6 Donald Street Winnipeg, MB R3L 0K6
180-A, 5th Street Morden, MB R6M 1C9

Our File: 21-0194
Acad dwg: 21-0194-3 SAM
Field Book: B&D 1568-34/37
Drafter: HD

© Barnes & Duncan, 2026
All rights reserved. No person may copy, reproduce, store, transmit, distribute or alter this document in whole or in part.

TITLE PLOT
LUDWICK ROAD
RM OF ST. CLEMENTS
OF PART OF
RL 230-234 PARISH OF ST. ANDREWS

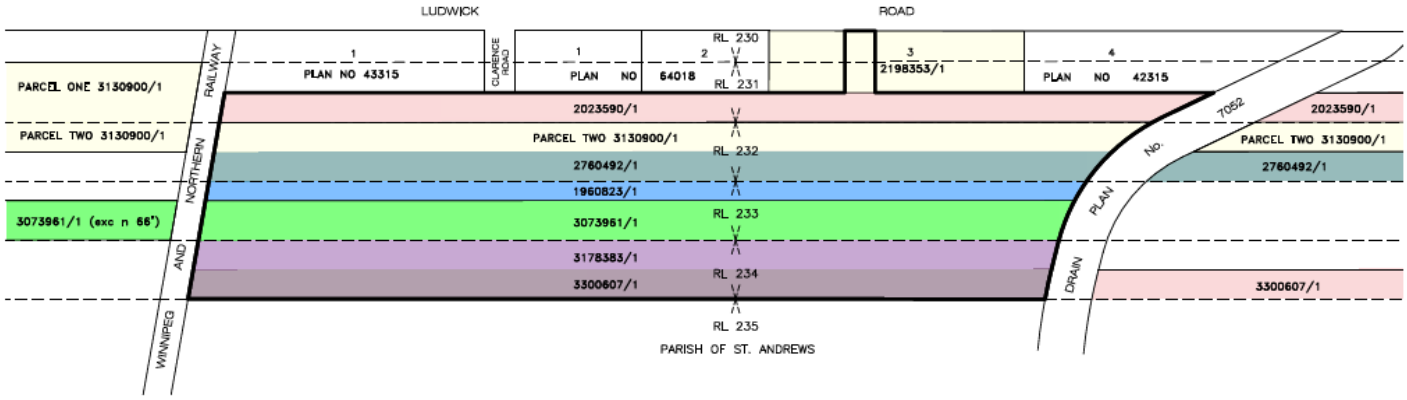

Prepared by:
Scott J. Dunphyroh, M.L.S.
6th day of February, 2026

THE LAND AFFECTED BY THIS PROPOSAL IS SHOWN HEREON BORDERED THUS _ _ _ _ _ ———

BARNES & DUNCAN
SURVEYING, ENGINEERING & PLANNING
6 Donald Street Winnipeg, MB R3L 0K6
180-A, 5th Street Morden, MB R6M 1C9

Our File: 21-0194
Acad dwg: 21-0194-3 SAM
Field Book: NA
Drafter: HD

© Barnes & Duncan, 2026
All rights reserved. No person may copy, reproduce, store, transmit, distribute or alter this document in whole or in part.

TITLE PLOT
LUDWICK ROAD
RM OF ST. CLEMENTS
OF PART OF
RL 230-234 PARISH OF ST. ANDREWS

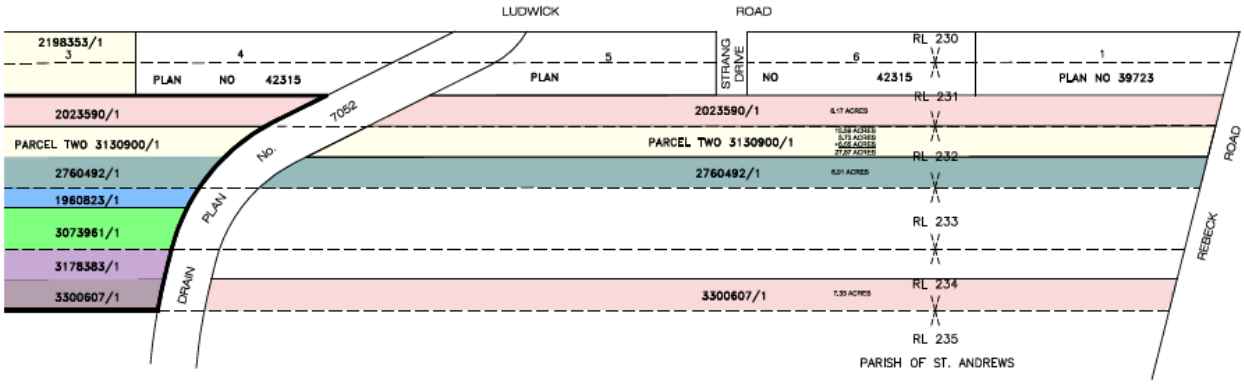

Prepared by:
Scott J. Dunphyroh, M.L.S.
6th day of February, 2026

BARNES & DUNCAN
6 Donald Street Winnipeg, MB R3L 0K6
180-A, 5th Street Morden, MB R6M 1C9

Our File: 21-0194
Acad dwg: 21-0194-3 SAM
Field Book: NA
Drafter: HD

THE LAND AFFECTED BY THIS PROPOSAL IS SHOWN HEREON BORDERED THUS

© Barnes & Duncan, 2026
All rights reserved. No person may copy, reproduce, store, transmit, distribute or alter this document in whole or in part.

TITLE PLOT
LUDWICK ROAD
RM OF ST. CLEMENTS
OF PART OF
RL 230-234 PARISH OF ST. ANDREWS

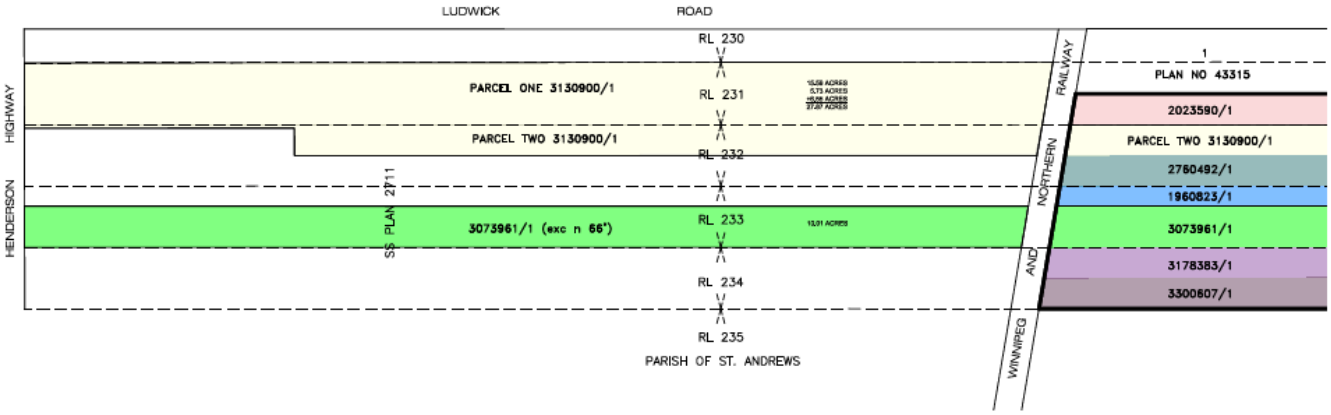

Prepared by:
Scott J. Dunphyroh, M.L.S.
6th day of February, 2026

BARNES & DUNCAN
6 Donald Street Winnipeg, MB R3L 0K6
180-A, 5th Street Morden, MB R6M 1C9

Our File: 21-0194
Acad dwg: 21-0194-3 SAM
Field Book: NA
Drafter: HD

THE LAND AFFECTED BY THIS PROPOSAL IS SHOWN HEREON BORDERED THUS

© Barnes & Duncan, 2026
All rights reserved. No person may copy, reproduce, store, transmit, distribute or alter this document in whole or in part.